A0 RELEASE FOR PRODUCTION
11/20/96 SMichnowicz DRN311
A1 CHANGED WIRING ON TB104
11/27/96 SMichnowicz ECN505
A2 ADD ALT WIREING FOR STROBE LIGHT
ADD NOTE FOR TEMP+ & TEMP-
CONNECTIONS FOR O2 UNITS ONLY
01/21/97 SMichnowicz ECN545

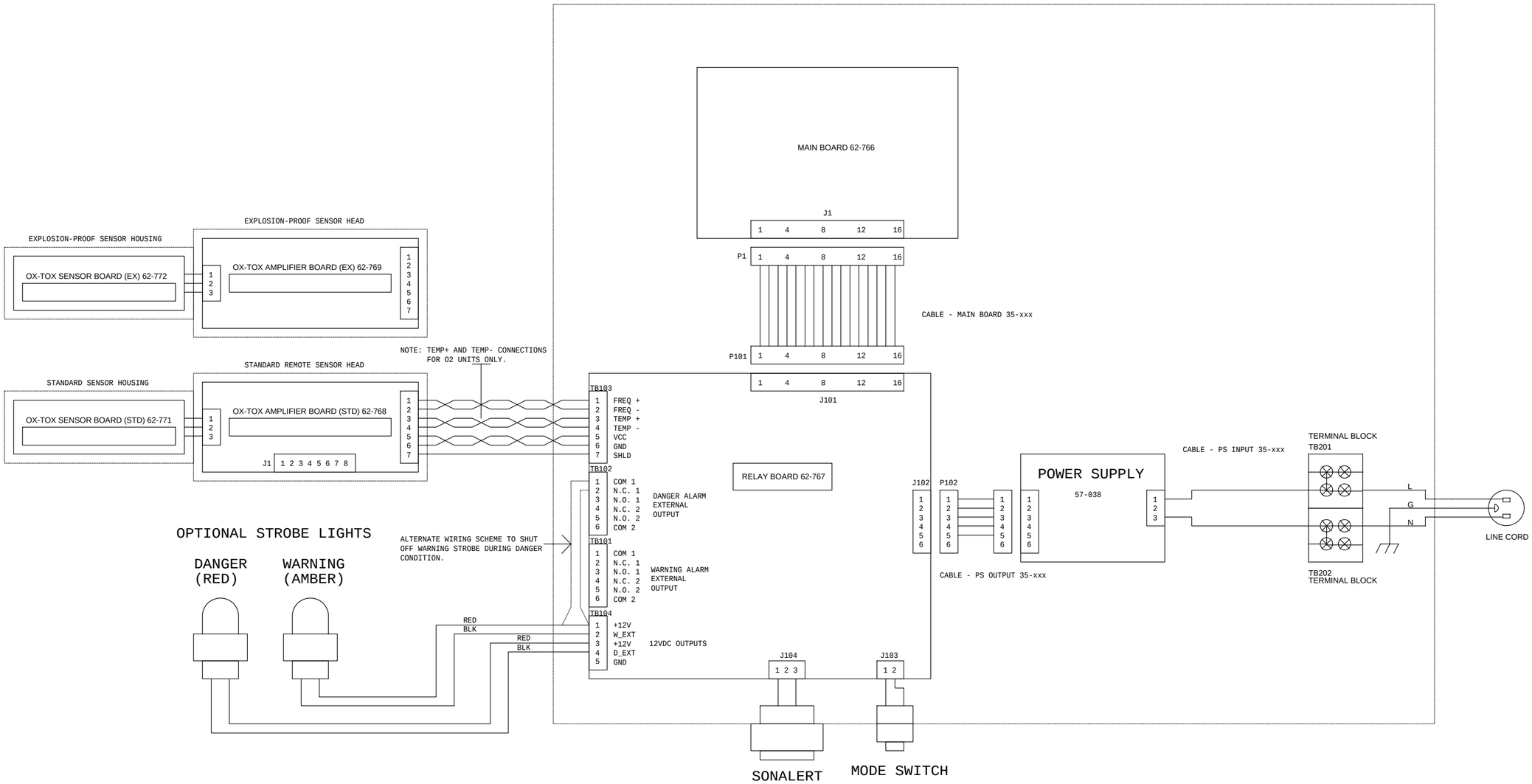

MAP 01/21/97

BIOSYSTEMS, INC.
651 SOUTH MAIN ST.
MIDDLETOWN, CT 06457
UNITED STATES OF AMERICA
TEL: (860) 344-1079

Document Title	Wiring Diagram - ZoneGuard - Remote Ox-Tox
Size C	Document Number 62-764
Rev	A2
Date: Friday, February 07, 1997	Sheet 1 of 1